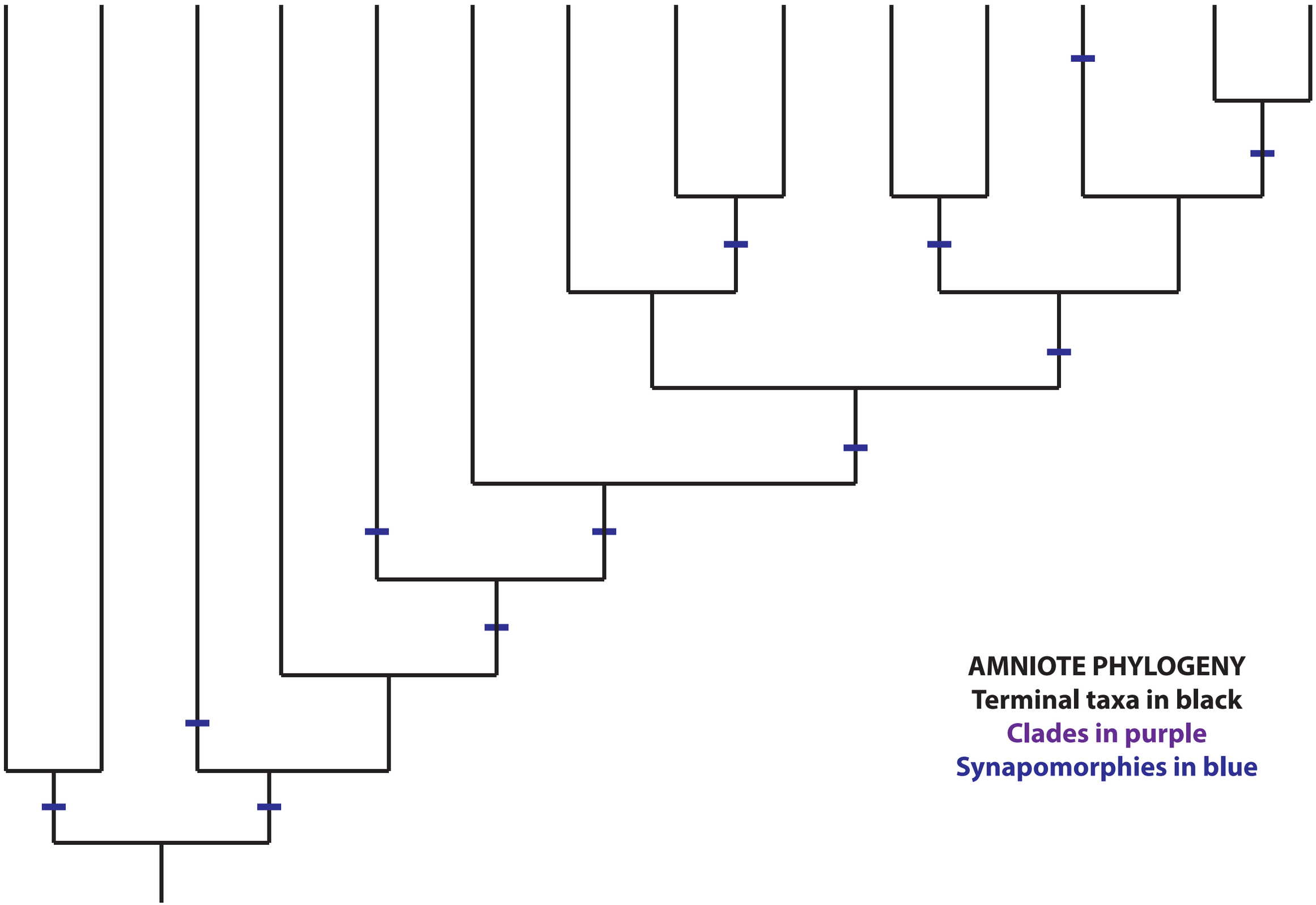

AMNIOTE PHYLOGENY
Terminal taxa in black
Clades in purple
Synapomorphies in blue

AMNIOTE PHYLOGENY HINTS

Terminal taxa in black
Clades in purple
Synapomorphies in blue

Terminal taxa in black

Dimetrodon
Brachiosaurus/Diplodocus (Sauropod)
Hadrosaur (Ornithopoda)
Mammal
Pachycephalosaur
Ankylosaur
Plesiosaur
Alligator (Crocodylomorph)
Triceratops (Ceratopsian)
Stegosaur
Pterosaur
Raptor/Tyranosaur
Bird
Snake (Lepidosaur)

Clades in purple

Sauria
Synapsida
Saurischia
Archosauria
Diapsida
Dinosauria
Theropoda
Thyreophora
Ornithischia
Marginocephalia

Synapomorphies in blue

Crurotarsal Ankle Joint
Pubis points backwards/towards tail
One post-orbital fenestra
Two post-orbital fenestrae
Bony shelf/margin at base of skull
Furcula
Bony Plates
Metatarsal Ankle Joint
Loss of a toe
4 chambered heart, Erect stance, Antorbital fenestra in skull & Parental care
Loss of one fenestra behind orbit & Flippers
Hip Socket Open, Bipedal, & Opposable Thumb